Warning Discrete TGSI
Stainless Steel Carpet System

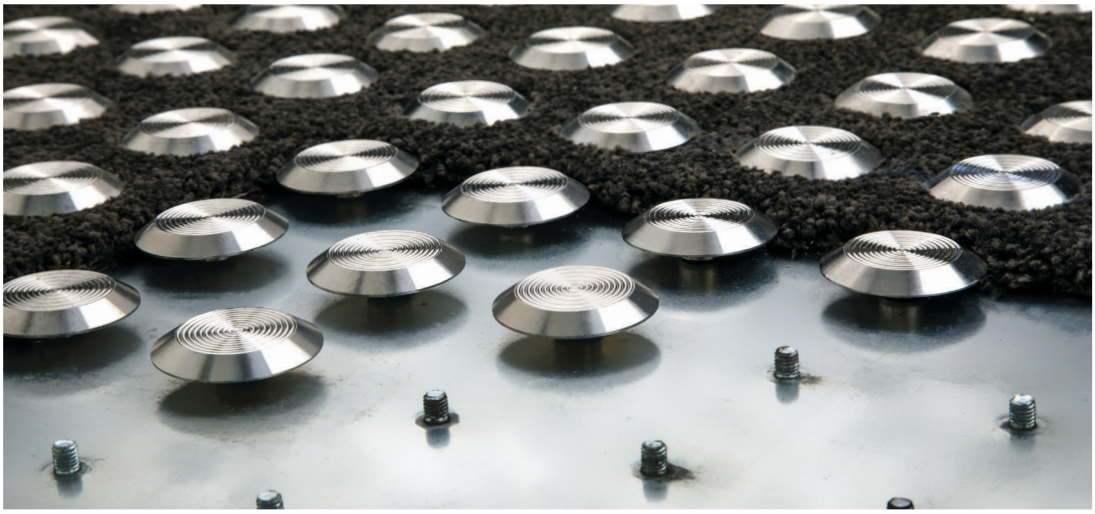

AS/NZ 1428.4.1 2009 STANDARD

P5 SLIP RATING NATA APPROVED LAB

5 YEAR PRODUCT WARRANTY

INSTALLATION SERVICE AVAILABLE

REQUIRES 45% LUMINANCE CONTRAST Testing Service Available

COLOUR VARIATIONS

Tactile Systems Australia Warning Discrete TGSI carpet system are made from 316 marine grade solid stainless steel or high quality Brass, the 300mm x 600 carpet base plates are welded with small threads which the Discrete TGSI are the screwed on to.

Their robust construction, longevity and elegant aesthetics make them ideal for busy high traffic environments, whilst adding a sense of class to any design.

Tactile Systems Australia products have been independently tested for slip resistance. Please contact us for a copy of the report. This product features a P5 slip resistance rating – as tested by a NATA Approved Laboratory.
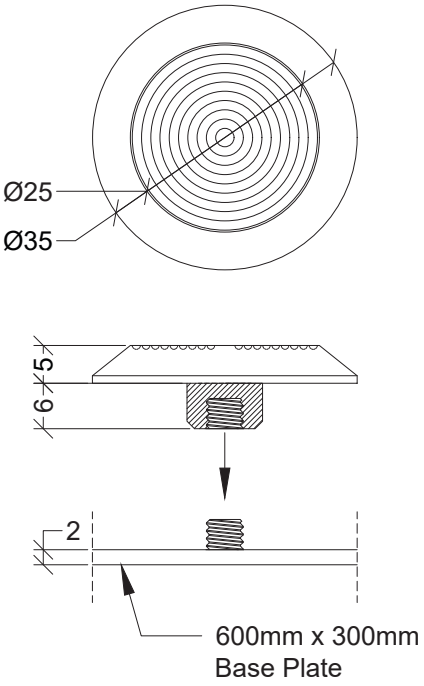
Specifications	
Colour	300mm x 600mm (Incl TGSI)
Silver	WDSS-6C-TSA-SIL
Brass	WDBR-6C-TSA-BRA